4

Types of anaerobic digesters for solid wastes

P. Vandevivere, L. De Baere and W. Verstraete

SUMMARY

The most common types of anaerobic digesters for solid wastes were compared based on biological and technical performance and reliability. A first distinction was made among one-stage, two-stage, and batch systems. Batch systems are the lowest-tech of all systems and also the cheapest. Their major drawbacks are a large footprint and a lower biogas yield due to the impairment of the percolation process via channeling and clogging. Batch systems have a high potential for application in developping countries. Two-stage systems are the most complex, and most expensive, of all systems. Their greatest advantage lies in the buffering of the organic loading rate taking place in the first stage, allowing a more constant feeding rate of the methanogenic second stage. This is a substantial advantage in the case of substrates whose degradation is limited by

the methanogenesis rather than by the hydrolysis, e.g. cellulose-poor kitchen wastes. These wastes, being very rapidly acidified, tend to inhibit the methanogenesis in one-stage reactors when the feedstock is not adequately mixed, buffered and dosed. A special type of two-stage system, designed with biomass accumulation devices in the second stage, displays a larger resistance toward toxicants and inhibiting substances such as ammonia. The drawback of this type of two-stage system is that solid particles need be removed from the feedstock to the second stage, which decreases the biogas yield. As a matter of fact, the large majority of industrial applications use one-stage systems and these are evenly split between systems where the wastes are digested as received ('dry' systems) and systems where the wastes are slurried with water to ca. 12 % TS. From a financial viewpoint, the 'wet' and 'dry' designs are comparable inasmuch as 'dry' designs require much smaller reactor volumes but more expensive equipment. In terms of biological performance, 'dry' designs have proven reliable due to their higher biomass concentration, controlled feeding and spatial niches. 'Wet' design may achieve similar reliability via dilution of potential inhibitors with fresh water. From a technical viewpoint, however, the 'dry' systems appear more robust as frequent technical failures are reported with 'wet' systems due to sand, stones, plastics and wood.

CONTENTS

ABBREVIATIONS and DEFINITIONS
4.1. INTRODUCTION
4.2. ONE-STAGE SYSTEMS
4.2.1. Introduction
4.2.2. 'Wet' complete mix systems
4.2.3. 'Dry' systems
4.3. TWO-STAGE SYSTEMS
4.3.1. Introduction
4.3.2. Without biomass retention
4.3.3. With a biomass retention scheme
4.4. BATCH SYSTEMS
4.5. PERSPECTIVES AND CONCLUSIONS
4.6. REFERENCES

ABBREVIATIONS AND DEFINITIONS

Biowaste	Mix of kitchen and garden waste, separated at the source (= VFG)
COD	Chemical oxygen demand
OFMSW	Mechanically-sorted organic fraction of municipal solid wastes
OLR	Organic loading rate
OLR_{max}	Maximum sustainable OLR
TS	Total solids content
UASB	Upflow anaerobic sludge blanket reactor
VS	Volatile solids content
VFG	Vegetable-fruit-garden wastes (= biowaste)

4.1. INTRODUCTION

If the literature on anaerobic digestion of solid wastes may at times appear confusing or difficult to summarize, one likely reason is that it is hard to find papers with similar experimental set-ups. In fact, it is precisely the appropriateness of a given reactor design for the treatment of particular organic wastes which forms the focus of most research papers. The comparison of research data and drawing of conclusions is difficult because the great diversity of reactor designs is matched by an as large variability of waste composition and choice of operational parameters (retention time, solids content, mixing, recirculation, inoculation, number of stages, temperature, ...). Empirical know-how is the rule and there certainly does not exist a consensus over the optimal reactor design to treat municipal solids. The reason most likely lies in the complexity of the biochemical pathways involved (chapter 1) and the novelty of the technology.

The discussion and evaluation of reactor designs will greatly vary depending on whether one takes a biological, technical, economical, or environmental viewpoint. While the biologist is concerned with the rate, stability and completion of biochemical reactions, the engineer will rather focus on wear and maintenance of electro-mechanical devices. On the other hand, a seller will rate reactor designs based on fixed and operational costs while the environmentalist will consider emissions of pollutants and recovery of energy or materials. This chapter strives to address the technical and biological viewpoints in depth and highlight a few environmental and financial issues.

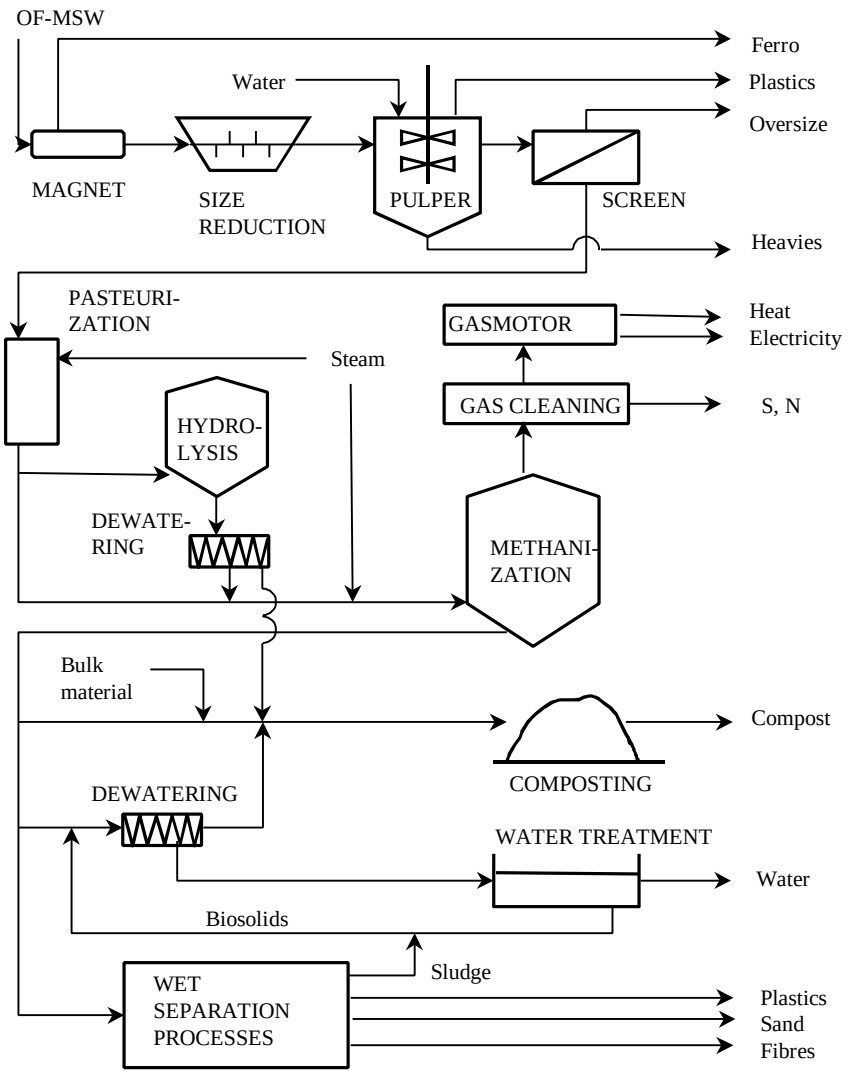

Figure 4.1. Examples of unit processes commonly used in conjunction with anaerobic digesters of solid wastes.

The scope of this chapter is limited to feedstocks consisting mainly in the organic fraction of municipal solid wastes sorted mechanically in central plants (OFMSW) or organics separated at the source, referred to here as biowaste (the vegetable-fruit-garden, or VFG, fraction). While this chapter specifically addresses the design of the biomethanization reactor, it should be kept in mind that the latter has many important implications on the need for specific pre- or post-treatment unit processes. Necessary pre-treatment steps may include magnetic separation, comminution in a rotating drum or shredder, screening, pulping, gravity separation or pasteurization (Figure 4.1). As post-treatment steps, the typical sequence involves mechanical dewatering, aerobic maturation, and water treatment but possible alternatives exist such as biological dewatering or wet mechanical separation schemes wherein various products may be recovered.

A plant treating municipal solids anaerobically is therefore best seen as a complex train of unit processes whereby wastes are transformed into a dozen products. Appropriate rating of given reactor designs should therefore also address the quantity and quality of these products (Table 4.1) as well as the need for additional pre- and post-treatments. These considerations are often decisive factors for the election of a technology for an actual project. The two main parameters chosen in this chapter to classify the realm of reactor designs are the number of stages and the concentration of total solids (% TS) in the fermenter because these parameters have a great impact on the cost, performance and reliability of the digestion process.

4.2. ONE-STAGE SYSTEMS

4.2.1. Introduction

The biomethanization of organic wastes is accomplished by a series of biochemical transformations, which can be roughly separated into a first step where hydrolysis, acidification and liquefaction take place and a second step where acetate, hydrogen and carbon dioxide are transformed into methane. In one-stage systems, all these reactions take place simultaneously in a single reactor, while in two- or multi-stage systems, the reactions take place sequentially in at least two reactors.

About 90 % of the full-scale plants currently in use in Europe for anaerobic digestion of OFMSW and biowastes rely on one-stage systems and these are approximately evenly split between 'wet' and 'dry' operating conditions (De Baere, 1999). This industrial trend is not mirrored by the scientific literature, which reports as many investigations on two-, multi-stage or batch systems as

on one-stage systems. A likely reason for this discrepancy is that two- and multi-stage systems afford more possibilities to the researcher to control and investigate the intermediate steps of the digestion process. Industrialists, on the other hand, prefer one-stage systems because simpler designs suffer less frequent technical failures and have smaller investment costs. Biological performance of one-stage systems is, for most organic wastes, as high as that of two-stage systems, provided the reactor is well designed and operating conditions carefully chosen (Weiland, 1992).

Table 4.1. Possible unit processes, products and quality standards involved in an anaerobic digestion plant for organics solids.

Unit processes	Reusable products	Standards or criteria
PRE-TREATMENT		
- Magnetic separation	- Ferrous metals	- Organic impurities
- Size reduction (drum or shredder)		- Comminution of paper, cardboard and bags
- Pulping with gravity separation	- Heavy inerts reused as construction material	- Organic impurities
- Drum screening	- Coarse fraction, plastics	- Calorific value
- Pasteurization		- Germs kill off
DIGESTION		
- Hydrolysis		
- Methanogenesis	- Biogas	- Norms nitrogen, sulfur
- Biogas valorization	- Electricity Heat (steam)	- 150 - 300 $kW.h_{elec}$/ton 250 - 500 $kW.h_{heat}$/ton
POST-TREATMENT		
- Mechanical dewatering		- Load on water treatment
- Aerobic stabilization or Biological dewatering	- Compost	- Norms soil amendments
- Water treatment	- Water	- Disposal norms
- Biological dewatering	- Compost	- Norms soil amendments
- Wet separation	- Sand Fibres (peat) Sludge	- Organic impurities Norms potting media Calorific value

4.2.2. One-stage 'wet' complete mix systems

4.2.2.1. Technical evaluation

At first glance, the one-stage wet system appears attractive because of its similarity to the demonstrated technology in use for decades for the anaerobic stabilization of biosolids produced in wastewater treatment plants. The physical

consistency of organic solid wastes is made to resemble that of biosolids, via pulping and slurrying to less than 15 % TS with dilution water, so that a classical complete mix reactor may be used. One of the first full-scale plants for the treatment of biowastes, built in the city of Waasa, Finland, in 1989, is based on this principle (Figure 4.2). A pulper with three vertical auger mixers is used to shred, homogenize and dilute the wastes in sequential batches. To this end, both fresh and recycled process water are added to attain 10 - 15 % TS. The obtained slurry is then digested in large complete mix reactors where the solids are kept in suspension by vertical impellers.

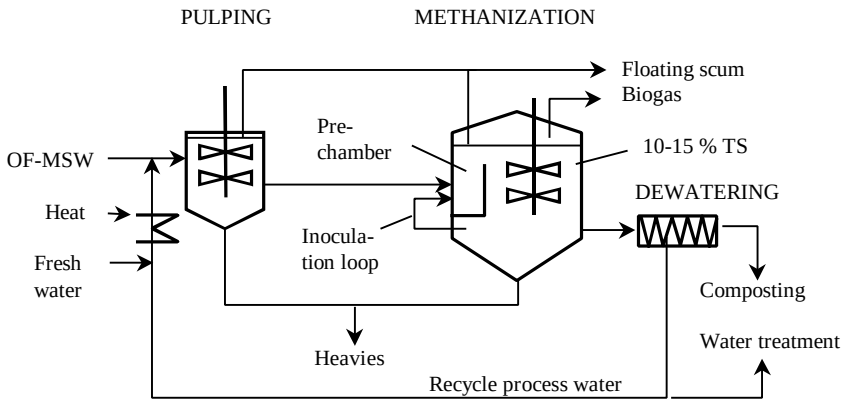

Figure 4.2. Typical design of a one-stage 'wet' system.

In contrast with the apparent simplicity of such one-stage wet process, many technical aspects need actually be taken into account and solved in order to guarantee a satisfactory process performance (Westergard and Teir, 1999; Farneti et al., 1999) (Table 4.2). The pre-treatment necessary to condition the wastes in a slurry of adequate consistency and devoid of coarse or heavy contaminants can be very complex, especially in the case of mechanically-sorted OFMSW. To achieve the objective of removing these contaminants while at the same time keeping as much biodegradable wastes within the main stream, requires a complicated plant involving screens, pulpers, drums, presses, breakers, and flotation units (Farneti et al., 1999). These pre-treatment steps inevitably incur a 15 - 25 % loss of volatile solids, with a proportional drop in biogas yield (Farneti et al., 1999).

Slurried wastes do not keep a homogenous consistency because heavier fractions and contaminants sink and a floating scum layer forms during the

digestion process, resulting in the formation of three layers of distinct densities, or phases, in the reactor. The heavies accumulate at the bottom of the reactor and moreover may damage the propellers while the floating layer, several meters thick, accumulates at the top of the reactor and will hamper effective mixing. It is therefore necessary to foresee means to extract periodically the light and heavy fractions from the reactor. Since the heavies do also damage pumps, they must be removed as much as possible before they enter the reactor, either in specifically-designed hydrocyclones or in the pulper which is designed with a settling zone.

Another technical drawback of the complete mix reactor is the occurrence of short-circuiting, i.e. the passage of a fraction of the feed through the reactor with a shorter retention time than the average retention time of the bulk stream. Not only does short-circuiting diminish the biogas yield, most importantly it impairs the proper hygienization of the wastes, i.e. the kill-off of microbial pathogens which requires a minimum retention time to complete. In the Waasa process, the advent of short-circuiting is somewhat alleviated by injecting the feed in a pre-chamber constructed within the main reactor (Figure 4.2). The piston flow occurring within the pre-chamber ensures at least a few days retention time. Since this compartmentalization hinders adequate inoculation of the feed, active biomass, drawn from the main compartment, is injected in the pre-chamber to speed up the digestion process. As the pre-chamber design seems however insufficient to guarantee satisfactory hygienization, it still remains necessary to pasteurize the wastes beforehand. To this end, steam is injected in the pulper to maintain the feed at 70 °C for one hour.

Table 4.2. Advantages and disadvantages of one-stage 'wet systems'.

Criteria	Advantages	Disadvantages
- Technical :	- Inspired from known process	- Short-circuiting - Sink and float phases - Abrasion with sand - Complicated pre-treatment
- Biological :	- Dilution of inhibitors with fresh water	- Particularly sensitive to shock loads as inhibitors spread immediately in reactor - VS lost with inerts and plastics
- Economical & Environ-mental :	- Equipment to handle slurries is cheaper (compensated by additional pre-treatment steps and large reactor volume)	- High consumption of water - Higher energy consumption for heating large volume

There exists a great variety of means to ensure adequate stirring of the digesting slurry within the reactor. For example, Weiland (1992) describes a pilot reactor with mechanical mixing ensured by downward movement in a centrally-located draft tube enclosing a screw (loop reactor). An interesting advantage of this mixing mode is that it prevents the build-up of a floating scum layer. Since moving parts within a sealed reactor are technically challenging, several designs were developed that ensure adequate mixing without any mechanical moving parts within the reactor. For example the Linde process uses a loop reactor design where an ascending movement in a central compartment is created by injection of recirculated biogas at the bottom end of a central tube. Mixing modes using a combination of propellers and gas recirculation are also sometimes used (Cozzolino et al., 1992).

4.2.2.2. Biological performance

The three most important indicators of biological performance are

- ? the rate,
- ? the degree of completion,
- ? and the stability of the biochemical reactions.

Sensu strictu the degree of completion is quantified by comparing the biogas yield obtained in the reactor per unit mass substrate fed with the maximum biogas yield obtained in lab-scale batch reactors operated under optimal conditions. While this comparison is perhaps the most important test used in the industry, published reports almost invariably fail to mention what the maximum yield amounts to. Instead, publications refer simply to the biogas yield or alternatively to the % VS removal from the waste stream to assess the degree of completion of the methanization process. Biogas yield as such is however of very little use because it is much more dependent on waste composition than on process performance. For example, the methane yield in one full-scale plant varied between 170 and 320 Nm^3 CH_4/kg VS fed (40 and 75 % VS reduction) during the summer and winter months, respectively, as a result of the higher proportion of garden waste during summer months (Saint-Joly et al., 1999). Garden wastes are indeed known to yield much less biogas, relative to kitchen wastes, due to the higher proportion of poorly degradable lignocellulosic fibres. Similarly, Pavan et al. (1999b), using the same reactor configuration, observed a two-fold larger VS reduction with source-separated biowaste relative to mechanically-sorted OFMSW. Such difference is not due to process performance but rather to the smaller biogas production potential of the mechanically-sorted OFMSW which contains a greater proportion of poorly-degradable organic material such as plastic impurities.

A more useful criterion of biological performance is the maximum sustainable reaction rate, which can be expressed as a rate of substrate addition, i.e. the maximum organic loading rate OLR_{max} (kg VS/m^3 reactor.d), or as a rate of product formation, i.e. the volume of dry biogas or, better, of methane (under standard conditions of pressure and temperature) produced per unit time per unit reactor volume (Nm^3 CH_4/m^3 reactor.d). These indicators are more useful than the biogas yield or % VS reduction because they are less sensitive to the ill-defined composition of the waste and better reflect the level of biological activity that a given reactor design may sustain. Another parameter of use to quantify the rate is the retention time, which is roughly the inverse of the OLR when the OLR is expressed as mass wet substrate instead of mass substrate VS. This parameter does not give much biological information because it is too dependent on solid content and dilution with process water.

The only accurate way to compare the biological performance of different reactor designs requires however the use of all three indicators simultaneously. The OLR_{max} indicates the degradative capacity of the system and the biogas yield its conversion efficiency, with 100 % conversion efficiency being defined as the maximum biogas yield potential determined under optimal conditions in the laboratory. If the latter is unknown, the biogas yield remains a valid indicator only for comparisons between studies where wastes of similar origin and composition are used. Finally, and of foremost importance, only those data pertaining to reactors where stable performance is demonstrated should be considered.

Pavan et al. (1999b) examined the performance of the thermophilic one-stage wet system in a pilot reactor for the treatment of OFMSW and biowastes. The sustainable OLR_{max} for mechanically-sorted OFMSW under thermophilic conditions was 9.7 kg VS/m^3.d. The same OLR was however unsustainable when the feed was switched to source-separated biowaste, for which the maximum OLR was 6 kg VS/m^3.d. Weiland (1992) found a similar OLR_{max} with various agro-industrial wastes under mesophilic conditions, provided these had C/N ratios greater than 20. Two plants were started in 1999 for the biomethanization of mechanically-sorted OFMSW with wet processes. The one in Verona, Italy, was designed with an OLR of 8 kg VS/m^3.d (Farneti et al., 1999) while the one in Groningen, The Netherlands, has a design capacity of 5 kg VS/m^3.d (92,000 Ton OFMSW per year in four reactors of 2,750 m^3 each).

It is not clear what the bottleneck is that determines these OLR_{max} values. Possible limiting factors are biomass concentration, mass transfer rate of substrates to bacteria, or accumulation of inhibitory substances. Since the feeding above the sustainable OLR_{max} typically leads to a decrease of biogas production, the bottleneck is most likely the concentration of inhibiting substances, such as fatty acids and ammonia. The high levels of Kjeldahl-N

typical of biowastes (21 vs 14 g/kg TS for mechanically-sorted OFMSW) leads to high levels of ammonia which decreases the methanogenic activity and affinity. This results in a rise of residual volatile fatty acids. Moreover, these fatty acids in turn inhibit the hydrolysis of polymers and acetogenesis of higher volatile fatty acids to acetate (Angelidaki, 1992). Inhibiting levels of fatty acids may also occur during overloads with substrates for which methanogenesis rather than hydrolysis is the limiting step, i.e. cellulose-poor substrates such as kitchen wastes.

Since inhibitors often limit the degradative capacity (OLR_{max}) of reactors treating OFMSW, the sensitivity of reactor designs toward inhibition is of particular concern. In this respect, the one-stage wet system suffers the disadvantage that the reactor contents are fully dispersed and homogenized which eliminates spatial niches wherein bacteria may be protected from transitory high concentrations of inhibitors. This disadvantage is however compensated by the fact that fresh water may be added to incoming wastes to lower the concentration of potential inhibitors. For example, in the above-mentioned study (Pavan, 1999b), the OFMSW was diluted two- to four-fold before feeding the reactor, apparently with tap water (no water recirculation was mentioned by the authors). The relevance of fresh water addition was demonstrated by Nordberg et al. (1992) in bench-scale reactors used to digest alfalfa silage. Process water produced in the dewatering stage was recycled to dilute the feed to a solid content of 6 % TS inside the reactor. However, the initially high biogas yield could be maintained only when a fraction of the recycled water was replaced by tap water in order to maintain the ammonium concentration below the threshold inhibitory level of 3 g/L. In the case of certain feed substrates, such as agro-industrial wastes with a C/N ratio below 20 and 60 % biodegradable VS, the ammonium concentration cannot be brought under this threshold value, even when tap water is used to dilute the feed (Weiland, 1992). In this case, the one-stage wet process fails entirely and special two-stage processes need be applied.

4.2.2.3. Economical and environmental issues

The slurrying of the solid wastes brings the economical advantage that cheaper equipment may be used, e.g. pumps and piping, relative to solid materials. This advantage is however balanced by the higher investment costs resulting from larger reactors with internal mixing, larger dewatering equipment, and necessary pre-treatment steps. Overall, investment costs are comparable to those for one-stage 'dry' systems.

One drawback of ecological significance is the uncomplete biogas recovery due to the fermentescibles removed with the floating scum layer and the heavy

fraction. Another one is the relatively high water consumption necessary to dilute the wastes (about 1 m^3 tap water per ton solid waste). Water consumption is often a decisive factor in the selection process of a reactor design in full-scale projects because higher water consumption, aside from ecological considerations, also incurs higher financial costs for water purchase, treatment before disposal and discharge fees. The several-fold increase of wastes volume due to dilution with water results in a parallel increase in steam consumption to heat up the reactor volume. This additional energy requirement does not however usually translate into larger internal use of produced biogas because the steam is usually recovered from the cooling water of the gas engines and exhaust fumes. In cases where the steam produced is exported to nearby factories, however, the yield will be lower.

4.2.3. One-stage 'dry' systems

4.2.3.1. Introduction

While the one-stage wet systems had initially been inspired from technology in use for the digestion of organic slurries, research during the 80's demonstrated that biogas yield and production rate were at least as high in systems where the wastes were kept in their original solid state, i.e. not diluted with water (Spendlin and Stegmann, 1988; Baeten and Verstraete, 1993; Oleszkiewicz and Poggi-Varaldo, 1997). The challenge was not one of keeping biochemical reactions going at high TS values, but rather one of handling, pumping and mixing solid streams. While most industrial realizations built until the 80's relied on 'wet' systems, the new plants erected during the last decade are evenly split between the wet and the dry systems (De Baere, 1999). No clear technology trend can be observed at this moment. Much will depend on the success of wet systems to deal with mechanically-sorted OFMSW. 'Dry' systems, on the other hand, have already proven reliable in France and Germany for the biomethanization of mechanically-sorted OFMSW.

4.2.3.2. Technical evaluation

In dry systems, the fermenting mass within the reactor is kept at a solids content in the range 20 - 40 % TS, so that only very dry substrates (> 50 % TS) need be diluted with process water (Oleszkiewicz and Poggi-Varaldo, 1997). The physical characteristics of the wastes at such high solids content impose technical approaches in terms of handling, mixing and pre-treatment which are fundamentally different from those of wet systems.

Transport and handling of the wastes is carried out with conveyor belts, screws, and powerful pumps especially designed for highly viscous streams. This type of equipment is more expensive than the centifugal pumps used in wet

systems and also much more robust and flexible inasmuch as wastes with solid content between 20 and 50 % can be handled and impurities such as stones, glass or wood do not cause any hindrance. The only pre-treatment which is necessary before feeding the wastes into the reactor is the removal of the coarse impurities larger than ca. 40 mm. This is accomplished either via drum screens, as is typically the case with mechanically-sorted OFMSW, or via shredders in the case of source-separated biowaste (Fruteau de Laclos et al., 1997; De Baere and Boelens, 1999; Levasseur, 1999). The heavy inert materials such as stones and glass which pass the screens or shredder need not be removed from the waste stream as is the case in wet systems. This makes the pre-treatment of dry systems somewhat simpler than that of their wet counterparts and very attractive for the biomethanization of OFMSW which typically contain 25 % by weight of heavy inerts (Table 4.3).

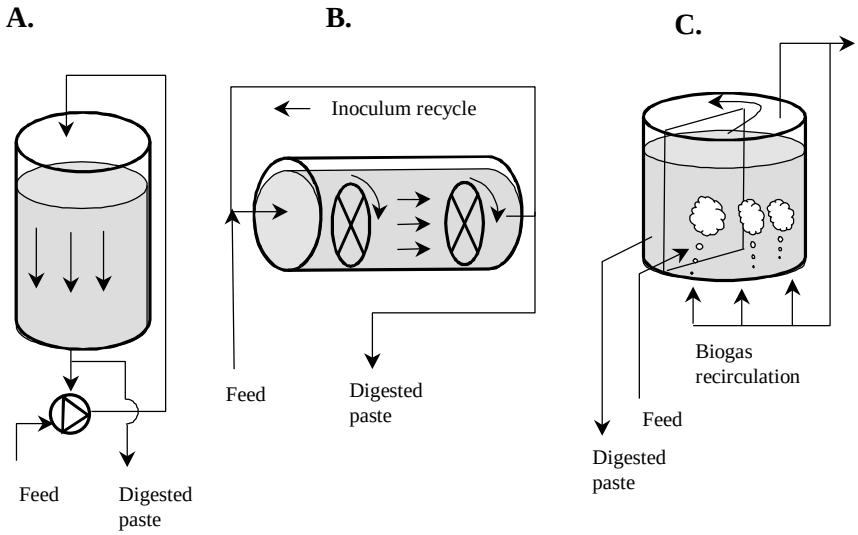

Figure 4.3. Different digester designs used in 'dry' systems (A illustrates the Dranco design, B the Kompogas and BRV designs, and C the Valorga design).

Due to their high viscosity, the fermenting wastes move via plug flow inside the reactors (Figure 4.3), contrary to wet systems where complete mix reactors are usually used. The use of plug flow within the reactor offers the advantage of technical simplicity as no mechanical devices need to be installed within the reactor. It leaves however the problem of mixing the incoming wastes with the fermenting mass, which is crucial to guarantee adequate inoculation and most of

all to prevent local overloading and acidification. At least three designs have been demonstrated effective for the adequate mixing of solid wastes at the industrial scale (Figure 4.3). In the Dranco process, the mixing occurs via recirculation of the wastes extracted at the bottom end, mixing with fresh wastes (one part fresh wastes for six parts digested wastes), and pumping to the top of the reactor. This simple design has been shown effective for the treatment of wastes ranging from 20 to 50 % TS. The Kompogas process works similarly, except that the plug flow takes place horizontally in cylindrical reactors. The horizontal plug flow is aided by slowly-rotating impellers inside the reactors, which also serve for homogenization, degassing, and resuspending heavier particles. This system requires careful adjustment of the solid content around 23 % TS inside the reactor. At lower values, heavy particles such as sand and glass tend to sink and accumulate inside the reactor while higher TS values cause excessive resistance to the flow. The Valorga system is quite different in that the horizontal plug flow is circular in a cylindrical reactor and mixing occurs via biogas injection at high pressure at the bottom of the reactor every 15 minutes through a network of injectors (Fruteau de Laclos et al., 1997). This elegant pneumatic mixing mode seems to work very satisfactorily since the digested wastes leaving the reactor need not be recirculated to dilute the incoming wastes. One technical drawback of this mixing design is that gas injection ports become clogged and maintenance of these is obviously cumbersome. As in the Kompogas process, process water is recirculated in order to achieve a solid content of 30 % TS inside the reactor. The Valorga design is ill-suited for relatively wet wastes since sedimentation of heavy particles inside the reactor takes place at solid contents beneath 20 % TS.

Due to mechanical constraints, the volume of the Kompogas reactor is fixed and the capacity of the plant is adjusted by building several reactors in parallel, each one with a treatment capacity of either 15,000 or 25,000 ton/yr (Thurm and Schmid, 1999). On the other hand, the volume of the Dranco and Valorga reactors can be adjusted in function of the capacity required, though they are not made to exceed 3300 m^3 and a height of 25 m.

4.2.3.3. Biological performance

Given the relevance of inhibition of acetogenesis and methanogenesis in the one-stage 'wet' systems discussed in the previous section, even greater inhibition problems may be expected in the 'dry' designs since no fresh dilution water is added. The high OLR that are being achieved in both bench-scale and full-scale applications of one stage 'dry' systems indicate however that the 'dry' systems are not more sensitive to inhibition than the 'wet' systems. In fact, 'dry' systems can sustain at least as high OLR as 'wet' systems, without suffering inhibition (see below) .

The sturdiness of the 'dry' systems toward inhibition was documented by Oleszkiewicz and Poggi-Varaldo (1997), but further research is needed in this area. Six and De Baere (1992) reported that no ammonium inhibition occurred in the thermophilic Dranco process for wastes having C/N ratios larger than 20. The same threshold value was noted by Weiland (1992) for mesophilic 'wet' systems, even though the latter system should yield much less of the toxic species NH_3 (assuming equal extent of ammonification). Threshold values for ammonium inhibition may also be expressed as ammonium concentration within the anaerobic reactor. The Valorga process running at 40 °C (Tilburg plant) sustains high OLR at ammonium concentration up to 3 g/l (Fruteau de Laclos et al., 1997) while the Dranco process running at 52 °C remains stable for ammonium concentrations up to 2.5 g/l. As these threshold values do not seem much higher than those commonly reported for 'wet' systems (though these are very disparate), one may speculate that the extent of ammonification is less in dry systems, leading to smaller production of inhibitory ammonium. Another possible explanation is that microorganisms within a dry fermenting medium are better shielded against toxicants since the absence of full mixing within the reactor limits the temporary shock loads to restricted zones in the digester, leaving other zones little exposed to transient high levels of inhibitors.

Table 4.3. Advantages and disadvantages of one-stage 'dry' systems.

Criteria	Advantages	Disadvantages
- Technical :	- No moving parts inside reactor - Robust (inerts and plastics need not be removed) - No short-circuiting	- Wet wastes (< 20 % TS) cannot be treated alone
- Biological :	- Less VS loss in pre- treatment - Larger OLR (high biomass) - Limited dispersion of transient peak concentrations of inhibitors	- Little possibility to dilute inhibitors with fresh water
- Economical & Environ-mental :	- Cheaper pre-treatment and smaller reactors - Complete hygienization - Very small water usage - Smaller heat requirement	- More robust and expensive waste handling equipment (compensated by smaller and simpler reactor)

In terms of extent of VS destruction, the three 'dry' reactor designs discussed above seem to perform very similarly, with biogas yields ranging from 90

Nm^3/ton fresh garden waste to 150 Nm^3/ton fresh food waste (Fruteau de Laclos et al., 1997; De Baere, 1999). These yields correspond to 210 - 300 Nm^3 CH_4 / ton VS, i.e. 50 - 70 % VS destruction. Though as discussed above the biogas yield is not an accurate measure of a system performance, it can be noted that these values are comparable to those achieved with wet systems which fall in the range 40 - 70 % VS destruction (Weiland, 1992; Pavan et al., 1999b; Westergard and Teir, 1999). A slightly greater biogas yield can however be expected with 'dry' systems compared to 'wet' systems since neither heavy inerts nor scum layer need be removed before or during the digestion.

Differences among the dry systems are more significant in terms of sustainable OLR. The Valorga plant at Tilburg, The Netherlands, treats peaks of 1,000 Ton VFG wastes per week in two digesters of 3,000 m^3 each at 40 °C (Fruteau de Laclos et al., 1997). This corresponds to an OLR of 5 kg VS/m^3.d, a value comparable to the design values of plants relying on wet systems. Optimized 'dry' systems may however sustain much higher OLR such as the Dranco plant in Brecht, Belgium, where OLR values of 15 kg VS/m^3.d were maintained as an average during a one-year period (De Baere, 1999). This very high value is achieved without any dilution of the wastes, i.e. 35 % TS inside the reactor, and corresponds to a retention time of 14 days during the summer months with 65 % VS destruction. Typical design OLR values of the Dranco process are however more conservative (ca. 12 kg VS/m^3.d) but remain about twice as high as those for 'wet' systems. As a consequence, at equal capacity, the reactor volume of a Dranco plant is ca. two-fold smaller than that of a 'wet' system.

4.2.3.4. Economical and environmental issues

The economical differences between the 'wet' and 'dry' systems are small, both in terms of investment and operational costs. The higher costs for the sturdy waste handling devices such as pumps, screws and valves required for 'dry' systems are compensated by a cheaper pre-treatment and reactor, the latter being several times smaller than for 'wet' systems. The smaller heat requirement of 'dry' systems does not usually translate in financial gain since the excess heat from gas motors is rarely sold to nearby industries. As in the case of 'wet' systems, ca. 30 % of produced electricity is used within the plant.

Differences between the 'wet' and 'dry' systems are more substantial on environmental issues. While 'wet' systems typically consume one m^3 fresh water per ton OFMSW treated, the water consumption of their 'dry' counterparts is ca. ten-fold less. As a consequence, the volume of wastewater to be discharged is several-fold less for 'dry' systems. Another environmental advantage of 'dry' systems is that the plug flow within the reactor guarantees, at

least under thermophilic conditions, the complete hygienization of the wastes and a pathogen-free compost as an end-product (Baeten and Verstraete, 1993).

4.3. TWO-STAGE SYSTEMS

4.3.1. Introduction

The rationale of two- and multi-stage systems is that the overall conversion process of OFMSW to biogas is mediated by a sequence of biochemical reactions which do not necessarily share the same optimal environmental conditions (chapter 1). Optimizing these reactions separately in different stages or reactors may lead to a larger overall reaction rate and biogas yield (Ghosh et al., 1999). Typically, two stages are used where the first one harbors the liquefaction-acidification reactions, with a rate limited by the hydrolysis of cellulose, and the second one harbours the acetogenesis and methanogenesis, with a rate limited by the slow microbial growth rate (Liu and Ghosh, 1997; Palmowski and Müller, 1999). With these two steps occurring in distinct reactors, it becomes possible to increase the rate of methanogenesis by designing the second reactor with a biomass retention scheme or other means (Weiland, 1992; Kübler and Wild, 1992). In parallel, it is possible to increase the rate of hydrolysis in the first stage by using microaerophilic conditions or other means (Capela et al., 1999; Wellinger et al., 1999). The application of these principles has led to a great variety of two-stage designs.

The increased technical complexity of two-stage relative to single-stage systems has not however always been translated in the expected higher rates and yields (Weiland, 1992). In fact, the main advantage of two-stage systems is not a putative higher reaction rate, but rather a greater biological reliability for wastes which cause unstable performance in one-stage systems (Table 4.4). It should be noted however that, in the context of industrial applications, even for the challenging treatment of highly degradable biowastes, preference is given to technically-simpler one-stage plants. Biological reliability is then achieved by adequate buffering and mixing of incoming wastes, by precisely-controlled feeding rate and, if possible, by resorting to co-digestion with other types of wastes (Weiland, 2000). Industrial applications have up to now displayed little acceptance for two-stage systems as these represent only ca. 10 % of the current treatment capacity (De Baere, 1999).

A distinction is made in this chapter between two-stage systems with and without a biomass retention scheme in the second stage. The reason for using this criterion is that the retention of biomass within a reactor is an important variable in determining the biological stability of the digester. Unstable

performance can be caused either by fluctuactions of OLR, due to wastes heterogeneity or dicontinuous feeding, or by wastes excessively charged with inhibiting substances such as nitrogen. All types of two-stage systems, regardless of whether biomass is accumulated or not, provide some protection against the fluctuations of OLR. However, only those two-stage systems with biomass retention schemes display stable performance with wastes excessively charged with nitrogen or other inhibitors (Weiland, 1992). Most commercial two-stage designs propose a biomass retention scheme in the second stage.

Table 4.4. Advantages and disadvantages of two-stage systems.

Criteria	Advantages	Disadvantages
- Technical :	- Design flexibility	- Complex
- Biological :	- More reliable for cellulose-poor kitchen waste - Only reliable design (with biomass retention) for C/N < 20	- Smaller biogas yield (when solids not methanogenized)
- Economical & Environ-mental :	- Less heavy metal in compost (when solids not methanoge-nized)	- Larger investment

4.3.2. Without biomass retention

4.3.2.1. Technical evaluation

The most simple design of two-stage systems, used primarily in laboratory investigations, are two complete mix reactors in series (Pavan et al., 1999a; Scherer et al., 1999). The technical features of each reactor are comparable to those presented above for the one-stage 'wet' system. The wastes are shredded and diluted with process water to ca. 10 % TS before entering the first digester.

Another possible design is the combination in series of two plug-flow reactors, either in the 'wet-wet' or 'dry-dry' mode, as illustrated by the Schwarting-Uhde and BRV processes, respectively. The source-sorted biowaste, finely chopped and diluted to 12 % TS, rises upward through a series of perforated plates placed within the reactors (Figure 4.4). Uniform upward movement is imparted by pulsating pumps which also ensure localized short-

term mixing via time-controlled impulses creating rapid rising of the liquid column (Trösch and Niemann, 1999). The impulses also push the biogas through the plate apertures. This elegant design, applied under 'wet' thermophilic conditions, is able to ensure, without any internal moving parts, adequate mixing and a plug flow mode which guarantees complete hygienization since short-circuiting is avoided. Moreover this design is not conducive to the formation of the thick floating scum layer commonly plaguing wet reactors. Its sensitivity to clogging of the perforated plates limits however the Schwarting-Uhde process to relatively clean highly biodegradable biowastes.

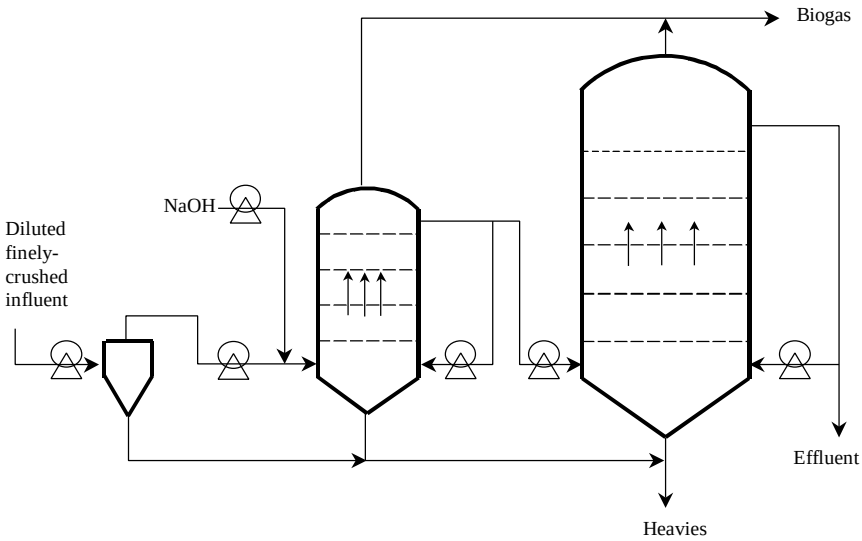

Figure 4.4. The Schwarting-Uhde process, a two-stage 'wet-wet' plug-flow system applicable to source-sorted biowastes, finely-choped (ca. 1 mm) and diluted to 12 % TS.

In the BRV process, the source-separated biowastes, adjusted to 34 % TS, pass through an aerobic upstream stage where organics are partially hydrolyzed and ca. 2 % lost through respiration. The reason for conducting the hydrolysis stage under microaerophilic conditions is that the loss of COD due to respiration is more than compensated by a higher extent of liquefaction, which, moreover, proceeds faster than under anaerobic conditions (Wellinger et al., 1999; Capela et al., 1999). After a two-day retention time, the pre-digested wastes are pumped through methanogenic reactors in a horizontal plug flow mode. The

digestion lasts 25 days at 55 °C and 22 % TS. The primary advantages of this system are the use of 'dry' conditions which reduces the size of the digesters and the use of piston flow which affords complete hygienization without a pasteurization step. The horizontal flow requires however the use of floor scrapers to eliminate the heavy material from the reactor and mixing equipment inside the reactor to prevent the formation of a crust layer.

4.3.2.2. Biological performance

The main advantage of the two-stage system is the greater biological stability it affords for very rapidly degradable wastes like fruits and vegetables (Pavan et al., 1999a). The reason commonly invoked is that the slower metabolism of methanogens relative to acidogens would lead to inhibiting accumulation of acids. Theoretically, however, this reasoning seems illogical as it would suffice to adjust the OLR of a one-stage system to the rate which can be handled by the methanogens to avoid any risk of acid accumulation. The OLR chosen in this manner for a one-stage system would not be inferior to that of a two-stage system.

In the practice, however, the greater reliability of two-stage systems has indeed at times been observed, at least in discontinuously-fed laboratory set-ups. For example, Pavan et al. (1999a) compared the performances of the one- and two-stage systems, using pilot complete mix reactors fed with very rapidly hydrolyzable biowastes from fruit and vegetable markets. While the one-stage system failed at 3.3 kg VS/m^3.d, the performance of the two-stage plant remained stable at an overall system OLR of 7 kg VS/m^3.d. This departure from theoretical predictions can be explained by the fact that actually applied OLR vary a great deal with time and space due to the heterogeneity of wastes and due to the discontinuous working of the feeding pump (feeding occurred only four times daily in the Pavan study). In cases where special care is taken to mix the feed thoroughly and dose it at constant OLR, one-stage 'wet' systems are as reliable and performant as two-stage systems even for highly degradable agro-industrial wastes, provided these have a C/N above 20 (Weiland, 1992).

The short-lived fluctuations of the actually applied OLR may lead to short-lived overloading in the one-stage system. In a two-stage system, however, these OLR fluctuations are somewhat buffered by the first stage, so that the OLR applied to the second stage is more uniform in time and space. In fact, this buffering of OLR in the first stage is somewhat similar to the effect of the plug flow pattern often used in the one-stage 'dry' systems because a plug flow with external mixing leaves large zones in the digester unexposed to transient high concentrations of inhibitors. Highly biodegradable kitchen wastes can indeed be digested in single-stage reactors provided these are thoroughly mixed before feeding and provided feeding occurs continuously, or at least five days per week

as in the one-stage 'dry' Dranco plant in Salzburg, Austria. This plant, which treats kitchen wastes, achieves a mean OLR of 5.0 kg VS/m^3.d with 80 % VS destruction.

As pointed out by Edelman et al. (1999), the OLR buffering taking place in a pre-digester is beneficial and useful only for the treatment of cellulose-poor wastes for which methanogenesis rather than hydrolysis-acidification is the rate-limiting step. For the majority of wastes, however, hydrolysis of cellulose is the rate-limiting step (Noike et al., 1985), and shock loads are not conducive to inhibition.

The second type of inhibition, resulting from unbalanced average composition of feed rather than from transient shock load, is, however, as deleterious to two-stage systems as it is to one-stage systems, except in cases where two-stage systems are equipped with a biomass retention scheme in the second stage, e.g. via attached growth on a fixed bed (see below).

In terms of biogas yields and OLR_{max}, little difference can be noted between one- and two-stage systems, at least for these two-stage systems without biomass retention discussed in this section. For example, the BRV plant in Heppenheim is designed with an OLR of 8.0 kg VS/m^3.d while the Schwarting-Uhde process seems to sustain an OLR_{max} up to 6 kg VS/m^3.d (Trösch and Niemann, 1999).

4.3.3. With a biomass retention scheme

4.3.3.1. Technical evaluation

In order to increase rates and resistance to shock loads or inhibiting substances, it is desirable to achieve high cell densities of the slowly-growing methanogenic consortium in the second stage. There are two basic ways to achieve this.

The first method to increase the concentration of methanogens in the second stage is to uncouple the hydraulic and solids retention time, thereby raising the solid content in the methanogenic reactor. These accumulated solids represent active biomass only in the case of wastes leaving no more than 5-15 % of their original solid content as residual suspended solids inside the reactor. This design will therefore be effective only for highly hydrolyzable kitchen or market wastes (Weiland, 1992; Madokoro et al., 1999). One way to uncouple the solid and hydraulic retention times is to use a contact reactor with internal clarifier (Weiland, 1992). Another way is to filter the effluent of the second stage on a membrane and return the concentrate in the reactor in order to retain the bacteria (Madokoro et al., 1999). Plugging of the microfiltration membranes can be avoided using a high cross-flow velocity achieved via reinjection of biogas. Excessive biomass was purged in a separate outlet line. Further upscaling of

these two interesting designs, which up to now could only be tested in small pilot plants, may face technical challenges such as the crushing of the feed down to 0.7 mm.

Another method to increase the concentration of slowly-growing methanogens in the second stage is to design the latter with support material allowing attached growth, high cell densities and long sludge age. The prerequisite of this design avenue is however that the feed to the attached growth reactor be very little charged with suspended particles, which means that the suspended solids remaining after the hydrolysis (first) stage should be removed. Two industrial processes, the BTA and Biopercolat designs, are based on these principles.

In the BTA 'wet-wet' process, illustrated in Figure 4.5, the 10 % TS pulp exiting the pasteurization step is dewatered and the liquor directly sent to the methanogenic reactor (Kübler and Wild, 1992). The solid cake is resuspended in process water and hydrolyzed in a complete mix reactor under mesophilic conditions (HRT 2-3 d). The pH within the hydrolysis reactor is maintained in the range 6-7 by recirculating process water from the methanogenic reactor. The output stream of the hydrolysis reactor is once more dewatered and the liquor fed to the methanogenic reactor. The latter, receiving only liquid effluents, is designed as a fixed film loop reactor in order to increase biomass concentration and age. From a technical point of view, this design shares the same limitations as the one-stage 'wet' system, i.e. short-circuiting, foaming, sinking of heavies, fouling of the impeller blades with plastic foils, obstruction of pipes with long objects such as sticks, and loss of 10-30 % of the incoming VS caused by the removal of the rake fraction in the hydropulper (Kübler and Wild, 1992). The major drawback of the 'wet-wet' system remains however its technical complexity as four reactors are necessary to achieve what other systems achieve in a single reactor.

The Biopercolat follows the same principles as the BTA process, with the difference that the first stage is carried out under 'dry' and microaerophilic conditions and is continuously percolated with process water to accelerate the liquefaction reaction (Edelmann et al., 1999; Wellinger et al., 1999). The flush water, containing up to 100 g COD/l, is fed to an anaerobic plug-flow filter filled with a support material. The separate optimization of the first stage, via aeration, and of the second stage, via biofilm growth, allows the system to run at the exceedingly low overall retention time of 7 days.

The Biopercolat system is quite innovative from a technical point of view. In order to prevent the channeling and clogging typically occurring in 'dry' percolated systems (see section 'batch design'), percolation occurs in large slowly-rotating (1 rpm) sieve drums with 1 mm mesh openings. In the methanogenic filter, a pulsating motion is imparted to the horizontal plug flow

in order to prevent plugging of the support material, improve mass transfer of substrates to biofilm, and improve degasification. Moreover, the 'dry' design of the percolation hydrolysis stage avoids the troublesome pulping stage required in 'wet' or 'wet-wet' systems. This system awaits however validation in the first full-scale plant currently planned in Germany (Garcia and Schalk, 1999).

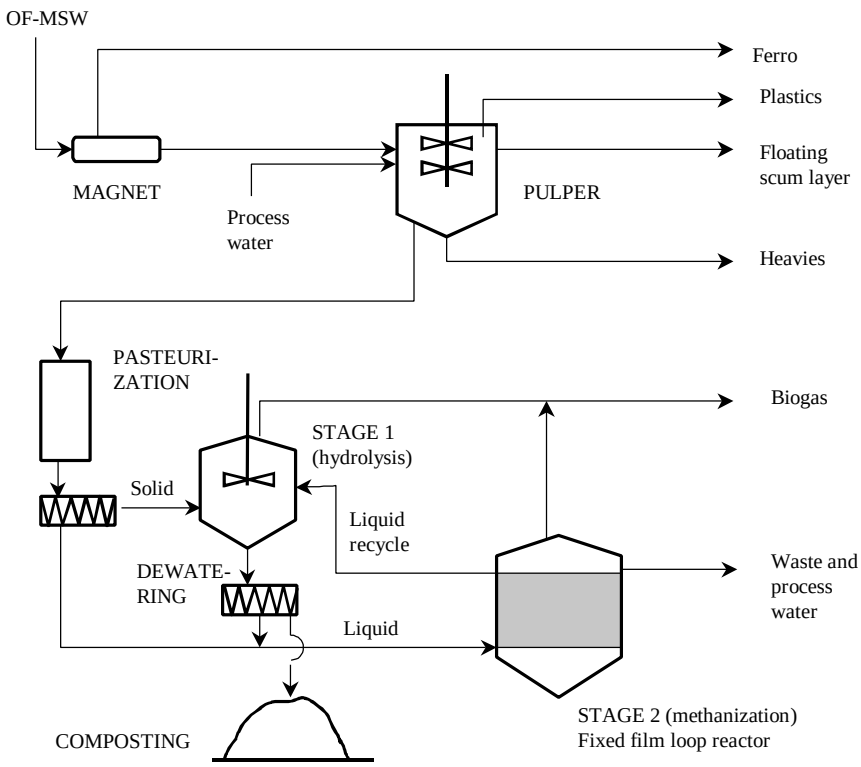

Figure 4.5. Two-stage 'wet-wet' design with a biomass retention scheme in the second stage (BTA process). The non-hydrolyzed solids are not sent to the second stage.

4.3.3.2. Biological performance

As a consequence of the higher biomass concentration in two-stage designs with attached growth, greater resistance toward inhibiting chemicals is achieved. Weiland (1992) compared one- and two-stage 'wet' pilot plants for the treatment

of highly biodegradable agro-industrial wastes. While the one-stage system failed at OLR of 4 kg VS/m^3.d for those wastes which yielded ca. 5 g NH_4^+/l due to ammonium inhibition, the same wastes could be processed in the two-stage system at OLR of 8 kg VS/m^3.d without impairment of methanogenesis. The stability of the methanogenesis at such elevated ammonium concentration was attributed to the higher bacterial concentration and age which could be obtained in the contact reactor with internal clarifier used in the second stage.

Another consequence of two-stage systems with biomass retention is the possibility of applying higher OLR in the methanogenic reactor, with values up to 10 and 15 kg VS/m^3.d reported for the BTA and Biopercolat processes, respectively (Kübler and Wild, 1992; Wellinger et al., 1999). These relatively high rates were however only achieved at the cost of 20-30 % lower biogas yields, due to the fact that the coarse solid particles remaining after the short hydrolysis stage, which still contain residual biodegradable polymers, are not fed to the methanogenic digester (Kübler and Wild, 1992; Garcia and Schalk, 1999).

4.4. BATCH SYSTEMS

4.4.1. Introduction

In batch systems, digesters are filled once with fresh wastes, with or without addition of seed material, and allowed to go through all degradation steps sequentially in the 'dry' mode, i.e. at 30-40 % TS. Though batch systems may appear as nothing more than a landfill-in-a-box, they in fact achieve 50- to 100-fold higher biogas production rates than those observed in landfills because of two basic features. The first is that the leachate is continuously recirculated, which allows the dispersion of inoculant, nutrients, and acids, and in fact is the equivalent of partial mixing. The second is that batch systems are run at higher temperatures than that normally observed in landfills.

Batch systems have up to now not suceeded in taking a substantial market share. However the specific features of batch processes (Table 4.5), such as a simple design and process control, robustness towards coarse and heavy contaminants, and lower investment cost make them particularly attractive for developing countries (Ouedraogo, 1999).

4.4.2. Technical evaluation

The hallmark of batch systems is the clear separation between a first phase where acidification proceeds much faster than methanogenesis and a second phase where acids are transformed into biogas. Three basic batch designs may

be recognized, which differ in the respective locations of the acidification and methanogenesis phases (Figure 4.6).

In the single-stage batch design, the leachate is recirculated to the top of the same reactor where it is produced. This is the principle of the Biocel process, which is implemented in a full-scale plant in Lelystad, The Netherlands, treating 35,000 Ton/yr source-sorted biowaste (ten Brummeler, 1999). The waste is loaded with a shovel in fourteen concrete reactors, each of 480 m^3 effective capacity and run in parallel. The leachates, collected in chambers under the reactors, are sprayed on the top surface of the fermenting wastes. One technical shortcoming of this and other batch systems, is the plugging of the perforated floor, resulting in the blockage of the leaching process. This problem is alleviated by limiting the thickness of the fermenting wastes to four meters in order to limit compaction and by mixing the fresh wastes with bulking material (one Ton dewatered digested wastes and 0.1 Ton wood chips added per Ton fresh wastes) (ten Brummeler, 1992). The addition of dewatered digested wastes, aside from acting as bulking material, also serves the purpose of inoculation and dilution of the fresh wastes. Safety measures need to be closely observed during the opening and emptying of the batches, as explosive conditions can occur.

Table 4.5. Advantages and disadvantages of batch systems.

Criteria	Advantages	Disadvantages
- Technical :	- Simple - 'Low-tech' - Robust (no hindrance from bulky items)	- Clogging - Need for bulking agent - Risk explosion during emptying of reactors
- Biological :	- Reliable process due to niches and use of several reactors	- Poor biogas yield due to channeling of percolate - Small OLR
- Economical & Environmental :	- Cheap, applicable to developping countries - Small water consumption	- Very large land acreage required (comparable to aerobic composting)

In the sequential batch design, the leachate of a freshly-filled reactor, containing high levels of organic acids, is recirculated to another more mature reactor where methanogenesis takes place (Figure 4.6). The leachate of the latter reactor, freed of acids and loaded with pH buffering bicarbonates, is

pumped back to the new reactor. This configuration also ensures cross-inoculation between new and mature reactors which eliminates the need to mix the fresh wastes with seed material. The technical features of the sequential batch design are similar to those of the single-stage design.

Finally, in the hybrid batch-UASB design, the mature reactor where the bulk of the methanogenesis takes place is replaced by an upflow anaerobic sludge blanket (UASB) reactor. The UASB reactor, wherein anaerobic microflora accumulates as granules, is well suited to treat liquid effluents with high levels of organic acids at high loading rates (Figure 4.6) (Anderson and Saw, 1992; Chen, 1999). This design is in fact very similar to the two-stage systems with biomass retention such as the Biopercolat system discussed above, with the difference that the first stage is a simple fill-and-draw (batch) instead of fully-mixed design.

4.4.3. Biological performance

The Biocel plant in Lelystad achieves an average yield of 70 kg biogas/Ton source-sorted biowaste. This is ca. 40 % smaller biogas yield than that obtained in continuously-fed one-stage systems treating the same type of waste (Saint-Joly et al., 1999; De Baere, 1999). This low yield is the result of leachate channeling, i.e. the lack of uniform spreading of the leachate which invariably tends to flow along preferential paths. The OLR of the Biocel process is however not exceedingly less than continuously-fed systems, as might have been expected from the simple design. The design OLR of the Lelystad plant was 3.6 kg VS/m^3.d at 37 °C and peak values of 5.1 kg VS/m^3.d during summer months seem sustainable (ten Brummeler, 1999).

In the sequential batch design, the conversion of the acids in a separate mature reactor ensures the rapid depletion of the produced acids, thus a more reliable process performance and less variable biogas composition (O'Keefe et al., 1992; Silvey et al. 1999). At OLR of 3.2 kg VS/m^3.d, biogas yields equivalent to 80-90 % of the maximal yield could be obtained in pilot reactors at 55 °C (O'Keefe et al., 1992; Silvey et al., 1999), which is considerably more than the yield reported in the Biocel plant. While the Biocel data were obtained from a full-scale plant treating compacted poorly-structured source-sorted biowaste at 40 % TS, the impressive biogas yields reported for the sequential batch design were obtained in pilot plants treating either unsorted MSW or mechanically-sorted OFMSW at 60 % TS with high levels of paper and cardboard and low bulk density (280 kg/m^3). The coarser structure and lesser degree of compaction of these wastes render these less conducive to the channeling and plugging phenomena responsible for poor biogas yields.

4.4.4. Economical and environmental issues

Because batch systems are technically simple, the investment costs are significantly (ca. 40 %) less than those of continuously-fed systems (ten Brummeler, 1992). The land area required by batch processes is however considerably larger than that for continuously-fed 'dry' systems, since the height of batch reactors is about five-fold less and their OLR two-fold less, resulting in a ten-fold larger required footprint per Ton treated wastes. Operational costs, on the other hand, seem comparable to those of other systems (ten Brummeler, 1992).

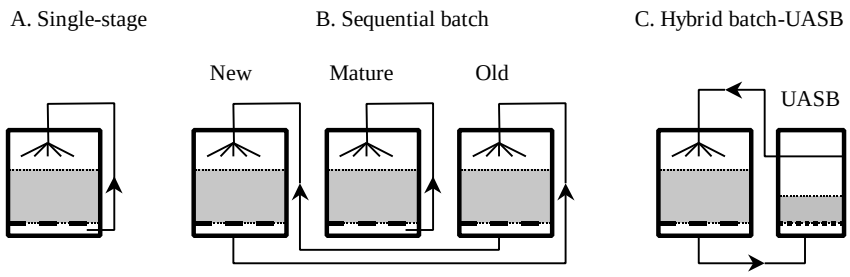

Figure 4.6. Configuration of leachate recycle patterns in different batch systems

4.5. PERSPECTIVES AND CONCLUSIONS

In the last 25 years, a remarkable evolution has occurred in the attitude towards in-reactor digestion of solid wastes. The scepticism with respect to the feasibility has changed towards a general acceptance that various digester types are functioning at the full scale in a reliable way.

Most existing full-scale plants were designed with a single-stage reactor and reflect the relative newness of the technology. It can be expected that one-stage systems will continue to dominate the market, but that the reactor designs will be improved and matched to more specific substrates. This should provide far more reliable plants. Many companies also offer several versions of one technology, or propose both 'wet' and 'dry' systems. Two-stage systems may start playing a more and more important role, especially if treatment of industrial wastes is to be combined with that of biowaste and hygienization may require a separate treatment step at higher temperatures. Batch systems also still need to make a breakthrough, but chances are that hygienization as well as safety requirements will make these systems more difficult to introduce. Batch

systems may be more successfull in developing countries due to the low investment costs.

At present, it is not possible to single out specific processes as all-round and optimally suited under all circumstances. Indeed, as discussed, many variables have to be taken into consideration and a final evaluation for a specific site will need to be made. There is and will continue to be room for technical diversity in this domain of waste treatment. Yet, practice shows that initial investment costs are of crucial importance. This factor, rather than the overall operating costs or performance characteristics often determines he outcome of a public tender. In view of the fact that such investments should serve at least several decades, it is to be hoped that decision makers will learn to have long-term foresight in these matters.

It must be recognized that anaerobic digestion of solid wastes still has to compete vigorously with aerobic composting. This is in part related to the fact that composting is a long-established technology which generally requires less initial investment. However, current energy prices and targetted reduction of fossil fuel combustion in the coming decades will draw increasingly more attention towards anaerobic digestion. Indeed, the amount of gas potentially recovered from the solid wastes is substantial at the level of a country. In the framework of the Kyoto agreements, many countries in Europe have agreed to stimulate the production of methane from wastes, e.g. by subsidizing the electricity from biogas by as much as 0.1 euro/kW.h. The latter certainly will be a major support for anaerobic digestion of complex wastes. The European Union has set the goal to increase the fraction of electricity produced with renewable ressources (excluding large hydroplant) from 3.2 % in 1997 to 12.5 % in 2010. Electricity generated from municipal solid waste by means of anaerobic digestion can make a significant contribution towards this goal.

4.6. REFERENCES

Anderson, G.K. and Saw, C.B. (1992) Leach-bed two-phase anaerobic digestion of municipal solid waste. In *Proc. Int. Symp. on Anaerobic Digestion of Solid Waste*, held in Venice, 14-17 April, 1992, (eds. F. Cecchi, J. Mata-Alvarez and F.G. Pohland), pp. 171-179, Int. Assoc. on Wat. Poll. Res. and Control.

Angelidaki, I. (1992) Anaerobic thermophilic process : the effect of lipids and ammonia. Ph.D. thesis, Dept of Biotechnology, Technical Univ. of Denmark, Lyngby, DK.

Baeten, D. and Verstraete, W. (1993) In-reactor anaerobic digestion of MSW-organics. In Science and engineering of composting: design, environmental, microbiological and utilization aspects (eds. Hoitink, H.A.J. and Keener, H.M.), pp. 111-129, Renaissance Publications, Worthington, OH.

Capela, I.F., Azeiteiro, C., Arroja, L. and Duarte, A.C. (1999) Effects of pre-treatment (composting) on the anaerobic digestion of primary sludges from a bleached kraft pulp mill. In *II Int. Symp. Anaerobic Dig. Solid Waste*, held in Barcelona, June 15-

17, 1999 (eds. J. Mata-Alvarez, A. Tilche and F. Cecchi), vol. 1, pp. 113-120, Int. Assoc. Wat. Qual.

Chen, T.-H. (1999) Anaerobic treatment of poultry mortalities. In *II Int. Symp. Anaerobic Dig. Solid Waste*, held in Barcelona, June 15-17, 1999 (eds. J. Mata-Alvarez, A. Tilche and F. Cecchi), vol. 2, pp. 69-72, Int. Assoc. Wat. Qual.

Cozzolino, C., Bassetti, A. and Rondelli, P. (1992) Industrial application of semi-dry anaerobic digestion process of organic solid waste. In *Proc. Int. Symp. on Anaerobic Digestion of Solid Waste*, held in Venice, 14-17 April, 1992, (eds. F. Cecchi, J. Mata-Alvarez and F.G. Pohland), pp. 551-555, Int. Assoc. Wat. Poll. Res. Control.

De Baere, L. (1999) Anaerobic digestion of solid waste: state-of-the art. In *II Int. Symp. Anaerobic Dig. Solid Waste*, held in Barcelona, June 15-17, 1999 (eds. J. Mata-Alvarez, A. Tilche and F. Cecchi), vol. 1, pp. 290-299, Int. Assoc. Wat. Qual.

De Baere, L. and Boelens, J. (1999) The treatment of greyand mixed solid waste by means of anaerobic digestion: future developments. In *II Int. Symp. Anaerobic Dig. Solid Waste*, held in Barcelona, June 15-17, 1999 (eds. J. Mata-Alvarez, A. Tilche and F. Cecchi), vol. 2, pp. 302-305, Int. Assoc. Wat. Qual.

Edelmann, W., Joss, A. and Engeli, H. (1999) Two-step anaerobic digestion of organic solid wastes. In *II Int. Symp. Anaerobic Dig. Solid Waste*, held in Barcelona, June 15-17, 1999 (eds. J. Mata-Alvarez, A. Tilche and F. Cecchi), vol. 2, pp. 150-153, Int. Assoc. Wat. Qual.

Farneti, A., Cozzolino, C., Bolzonella, D., Innocenti, L. and Cecchi, C. (1999) Semi-dry anaerobic digestion of OFMSW: the new full-scale plant of Verona (Italy). In *II Int. Symp. Anaerobic Dig. Solid Waste*, held in Barcelona, June 15-17, 1999 (eds. J. Mata-Alvarez, A. Tilche and F. Cecchi), vol. 2, pp. 330-333, Int. Assoc. Wat. Qual.

Fruteau de Laclos, H., Desbois, S. and Saint-Joly, C. (1997) Anaerobic digestion of municipal solid organic waste : Valorga full-scale plant in Tilburg, The Netherlands. In *Proc. 8th Int. Conf. on Anaerobic Dig.*, held in Sendai, May 25-29, 1997, vol. 2, pp. 232-238, Int. Assoc. Wat. Qual.

Garcia, J.L. and Schalk, P. (1999) Biopercolat-procedure. In *II Int. Symp. Anaerobic Dig. Solid Waste*, held in Barcelona, June 15-17, 1999 (eds. J. Mata-Alvarez, A. Tilche and F. Cecchi), vol. 2, pp. 298-301, Int. Assoc. Wat. Qual.

Ghosh, S., Henry, M.P., Sajjad, A., Mensinger, M.C. and Arora, J.L. (1999) Pilot-cale gasification of MSW by high-rate and two-phase anaerobic digestion. In *II Int. Symp. Anaerobic Dig. Solid Waste*, held in Barcelona, June 15-17, 1999 (eds. J. Mata-Alvarez, A. Tilche and F. Cecchi), vol. 1, pp. 83-90, Int. Assoc. Wat. Qual.

Kübler, H. and Wild, M. (1992) The BTA-process high rate biomethanisation of biogenous solid wastes. In *Proc. Int. Symp. on Anaerobic Digestion of Solid Waste*, held in Venice, 14-17 April, 1992, (eds. F. Cecchi, J. Mata-Alvarez and F.G. Pohland), pp. 535-538, Int. Assoc. on Wat. Poll. Res. and Control.

Levasseur, J.-P. (1999) Anaerobic digestion of organic waste:from theory to industrial practice. In *II Int. Symp. Anaerobic Dig. Solid Waste*, held in Barcelona, June 15-17, 1999 (eds. J. Mata-Alvarez, A. Tilche and F. Cecchi), vol. 2, pp. 334-337, Int. Assoc. Wat. Qual.

Liu, T. and Ghosh, S. (1997) Phase separation during anaerobic fermentation of solid substrates in an innovative plug-flow reactor. In *Proc. 8th Int. Conf. on Anaerobic Dig.*, held in Sendai, May 25-29, 1997, vol. 2, pp. 17-24, Int. Assoc. Wat. Qual.

Madokoro, T., Ueno, M., Moro, M., Yamamoto, T. and Shibata, T. (1999) Anaerobic digestion system with micro-filtration membrane for kitchen refuse. In *II Int. Symp.*

Anaerobic Dig. Solid Waste, held in Barcelona, June 15-17, 1999 (eds. J. Mata-Alvarez, A. Tilche and F. Cecchi), vol. 2, pp. 105-108, Int. Assoc. Wat. Qual.

Noike, T., Endo, G., Chang, J., Yaguchi, J. and Matsumoto, J. (1985) Characteristics of carbohydrate degradation and the rate-limiting step in anaerobic digestion. *Biotechnol. Bioeng.* **27**:1482-1489.

Nordberg, A., Nilsson, A. and Blomgren, A. (1992) Salt accumulation in a biogas process with liquid recirculation. Effect on gas production, VFA concentration and acetate metabolism. In *Proc. Int. Symp. on Anaerobic Digestion of Solid Waste*, held in Venice, 14-17 April, 1992, (eds. F. Cecchi, J. Mata-Alvarez and F.G. Pohland), pp. 431-435, Int. Assoc. on Wat. Poll. Res. and Control.

O'Keefe, D.M., Chynoweth, D.P., Barkdoll, A.W., Nordstedt, R.A., Owens, J.M. and Sifontes, J. (1992) Sequential batch anaerobic composting. In *Proc. Int. Symp. on Anaerobic Digestion of Solid Waste*, Venice, 14-17 April, 1992, (eds. F. Cecchi, J. Mata-Alvarez and F.G. Pohland), pp. 117-125, Int. Assoc. Wat. Poll. Res. Control.

Oleszkiewicz, J.A. and Poggi-Varaldo (1997) High-solids anaerobic digestion of mixed municipal and industrial wastes. *J. Environ. Eng.* **123**: 1087-1092.

Ouedraogo, A. (1999) Pilot scale two-phase anaerobic digestion of the biodegradable organic fraction of Bamako district municipal solid waste. In *II Int. Symp. Anaerobic Dig. Solid Waste*, held in Barcelona, June 15-17, 1999 (eds. J. Mata-Alvarez, A. Tilche and F. Cecchi), vol. 2, pp. 73-76, Int. Assoc. Wat. Qual.

Palmowski, L. and Müller, J. (1999) Influence of the size reduction of organic waste on their anaerobic digestion. In *II Int. Symp. Anaerobic Dig. Solid Waste*, held in Barcelona, June 15-17, 1999 (eds. J. Mata-Alvarez, A. Tilche and F. Cecchi), vol. 1, pp. 137-144, Int. Assoc. Wat. Qual.

Pavan, P., Battistoni, P., Cecchi, F., Mata-Alvarez, J. (1999a) Two-phase anaerobic digestion of source-sorted OFMSW: performance and kinetic study. In *II Int. Symp. Anaerobic Dig. Solid Waste*, held in Barcelona, June 15-17, 1999 (eds. J. Mata-Alvarez, A. Tilche and F. Cecchi), vol. 1, pp. 91-98, Int. Assoc. Wat. Qual.

Pavan, P., Battistoni, P., Mata-Alvarez, J. (1999b) Performance of thermophilic semi-dry anaerobic digestion process changing the feed biodegradability. In *II Int. Symp. Anaerobic Dig. Solid Waste*, held in Barcelona, June 15-17, 1999 (eds. J. Mata-Alvarez, A. Tilche and F. Cecchi), vol. 1, pp. 57-64, Int. Assoc. Wat. Qual.

Scherer, P.A., Vollmer, G.-R., Fakhouri, T. and Martensen, S. (1999) Development of a methanogenic process to degrade exhaustively municipal 'residual refuse' (MRR) and 'grey waste' under thermophilic and hyperthermophilic conditions. In *II Int. Symp. Anaerobic Dig. Solid Waste*, held in Barcelona, June 15-17, 1999 (eds. J. Mata-Alvarez, A. Tilche and F. Cecchi), vol. 1, pp. 65-74, Int. Assoc. Wat. Qual.

Six, W. and De Baere, L. (1992) Dry anaerobic conversion of municipal solid waste by means of the Dranco process at Brecht, Belgium. In *Proc. Int. Symp. on Anaerobic Digestion of Solid Waste*, held in Venice, 14-17 April, 1992, (eds. F. Cecchi, J. Mata-Alvarez and F.G. Pohland), pp. 525-528, Int. Assoc. Wat. Poll. Res. Control.

.Silvey, P., Blackall, L., Nichols, P. and Pullammanappallil, P. (1999) Microbial ecology of the leach bed anaerobic digestion of unsorted municipal solid waste. In *II Int. Symp. Anaerobic Dig. Solid Waste*, held in Barcelona, June 15-17, 1999 (eds. J. Mata-Alvarez, A. Tilche and F. Cecchi), vol. 1, pp. 17-24, Int. Assoc. Wat. Qual.

Spendlin, H.-H. and Stegmann, R. (1988) Anaerobic fermentation of the vegeable, fruit, and yard waste. In *Proc. 5th Int. Solid Wastes Conf.*, held in Copenhagen, September 11-16, 1988 (eds. L. Andersen and J. Moller), vol. 2, pp. 25-31, Academic Press, London.

ten Brummeler, E. (1999) Full scale experience with the Biocel-process. In *II Int. Symp. Anaerobic Dig. Solid Waste*, held in Barcelona, June 15-17, 1999 (eds. J. Mata-Alvarez, A. Tilche and F. Cecchi), vol. 1, pp. 308-314, Int. Assoc. Wat. Qual.

ten Brummeler, E. (1992) Dry anaerobic digestion of solid waste in the Biocel process with a full scale unit. In *Proc. Int. Symp. on Anaerobic Digestion of Solid Waste*, held in Venice, 14-17 April, 1992, (eds. F. Cecchi, J. Mata-Alvarez and F.G. Pohland), pp. 557-560, Int. Assoc. on Wat. Poll. Res. and Control.

Thurm, F. and Schmid, W. (1999) Renewable energy by fermentation of organic waste with the Kompogas process. In *II Int. Symp. Anaerobic Dig. Solid Waste*, held in Barcelona, June 15-17, 1999 (eds. J. Mata-Alvarez, A. Tilche and F. Cecchi), vol. 2, pp. 342-3345, Int. Assoc. Wat. Qual.

Trösch, W. and Niemann, V. (1999) Biological waste treatment using the thermophilic schwarting-Uhde process. In *II Int. Symp. Anaerobic Dig. Solid Waste*, held in Barcelona, June 15-17, 1999 (eds. J. Mata-Alvarez, A. Tilche and F. Cecchi), vol. 2, pp. 338-341, Int. Assoc. Wat. Qual.

Weiland, P. (1992) One- and two-step anaerobic digestion of solid agroindustrial residues. In *Proc. Int. Symp. on Anaerobic Digestion of Solid Waste*, held in Venice, 14-17 April, 1992, (eds. F. Cecchi, J. Mata-Alvarez and F.G. Pohland), pp. 193-199, Int. Assoc. on Wat. Poll. Res. and Control.

Weiland, P. (2000) Cofermentation of organic wastes - Concepts, processes and new developments. In *Abstr. of the lecture group Environ. Technol., Int. Meeting Chem. Eng., Environ. Protec., Biotechnol.*, held in Frankfurt am Main, May 2000, pp. 192-194, Dechema, Frankfurt am Main, D.

Wellinger, A., Widmer, C. and Schalk, P. (1999) Percolation - a new process to treat MSW. In *II Int. Symp. Anaerobic Dig. Solid Waste*, held in Barcelona, June 15-17, 1999 (eds. J. Mata-Alvarez, A. Tilche and F. Cecchi), vol. 1, pp. 315-322, Int. Assoc. Wat. Qual.

Westergard, R. and Teir, J. (1999) The Waasa process integrated in the eco-cycling society. In *II Int. Symp. Anaerobic Dig. Solid Waste*, held in Barcelona, June 15-17, 1999 (eds. J. Mata-Alvarez, A. Tilche and F. Cecchi), vol. 2, pp. 310-313, Int. Assoc. Wat. Qual.